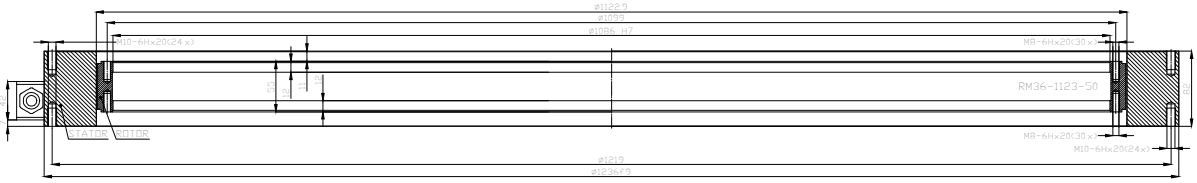
ø1122,9
ø1099
ø1086 H7
M10-6Hx20(24 x)
M8-6Hx20(30 x)
RM36-1123-50
STATOR MOTOR
M8-6Hx20(30 x)
M10-6Hx20(24 x)
ø1212
ø1236 f9

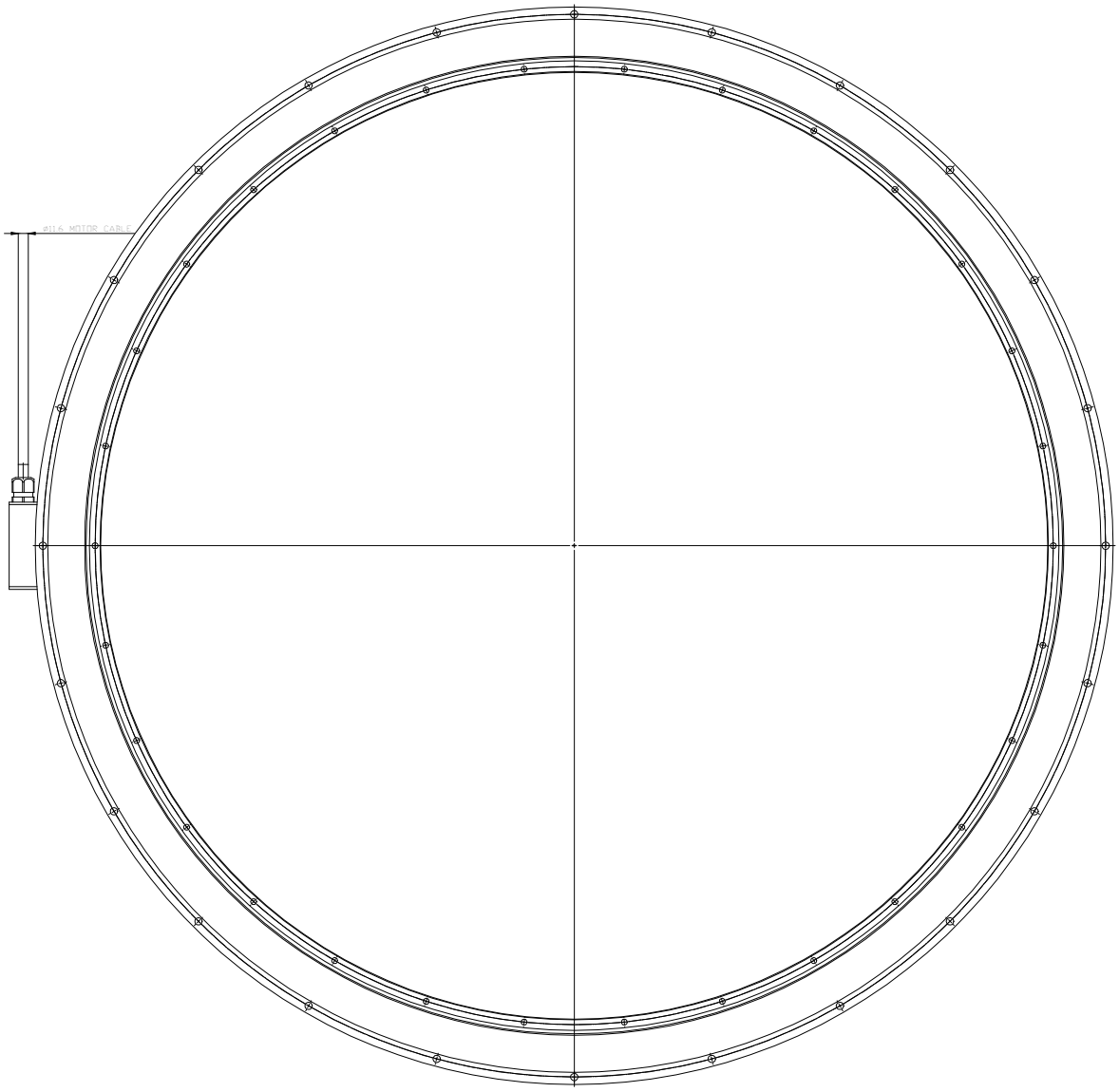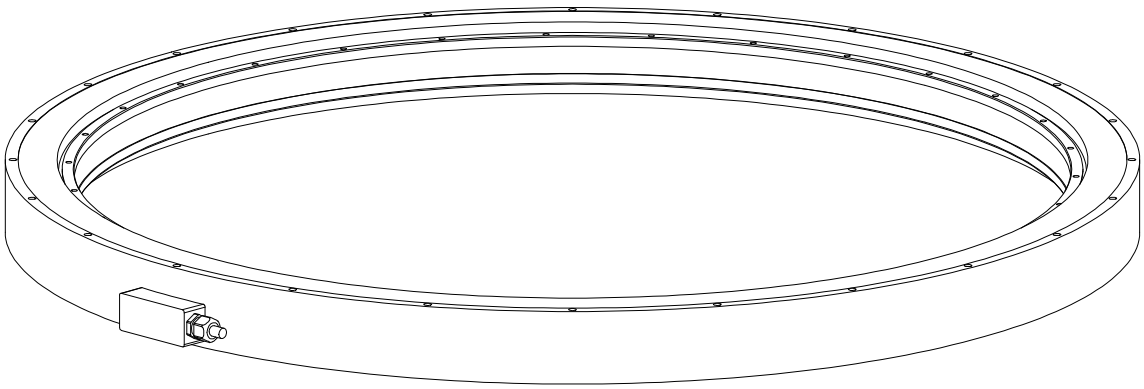
ø116 MOTOR CABLE