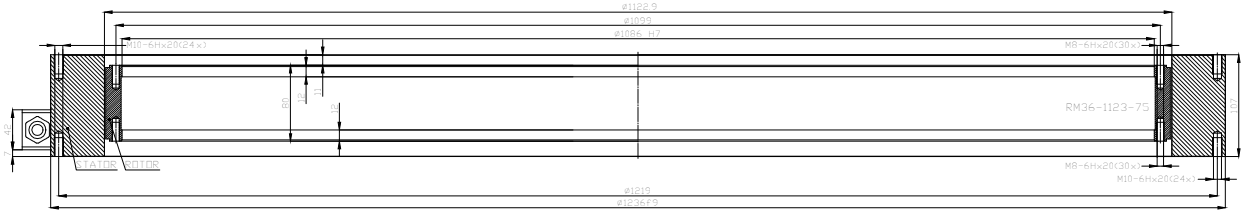
ø1122.9
ø1099
ø1086 H7
M10-6Hx20(24x)
M8-6Hx20(30x)
RM36-1123-75
ø1219
ø1236.9

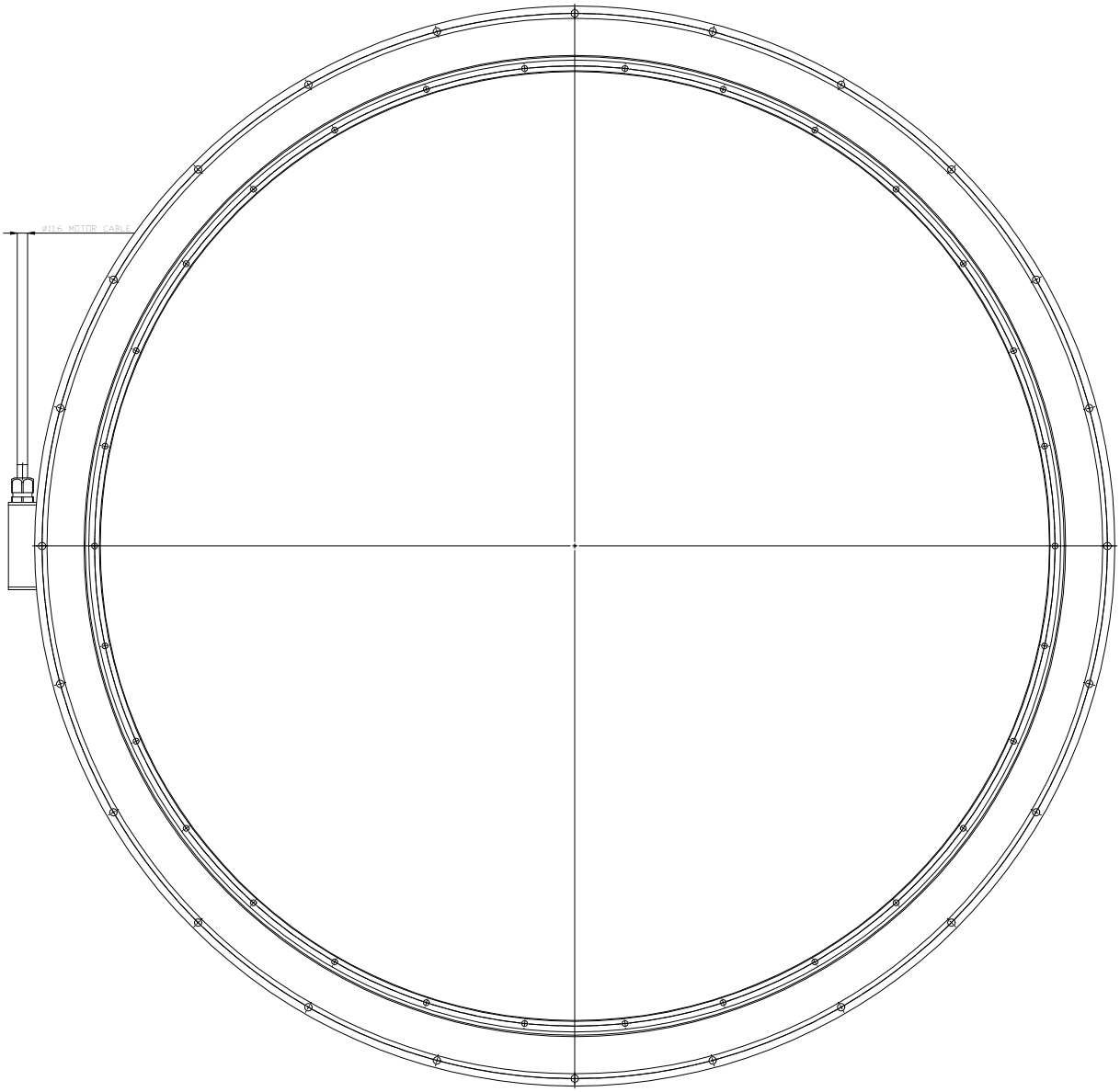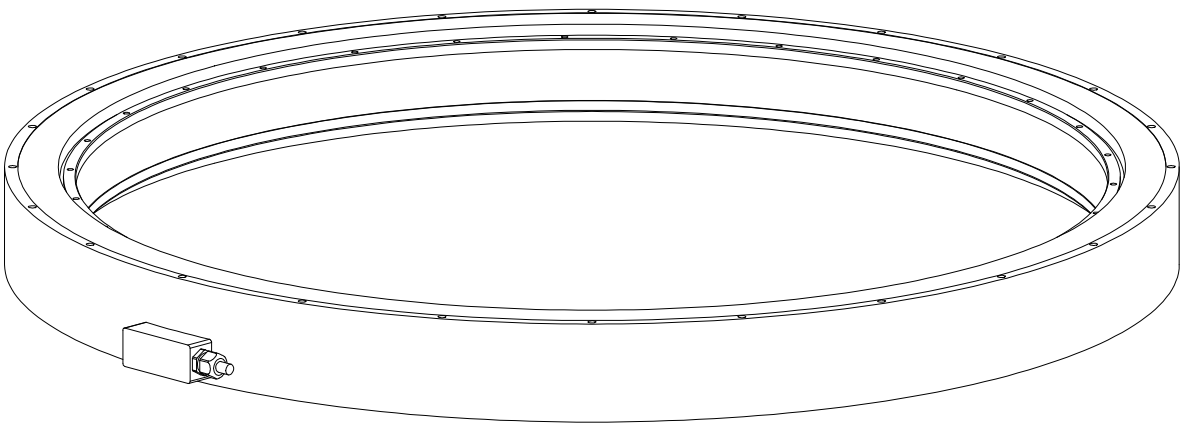
ø116 MOTOR CABLE