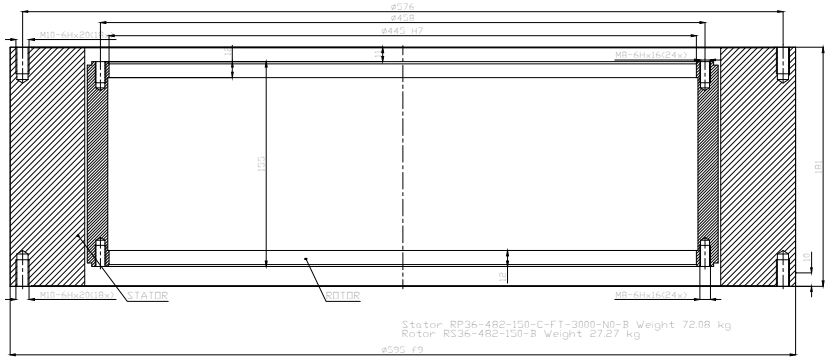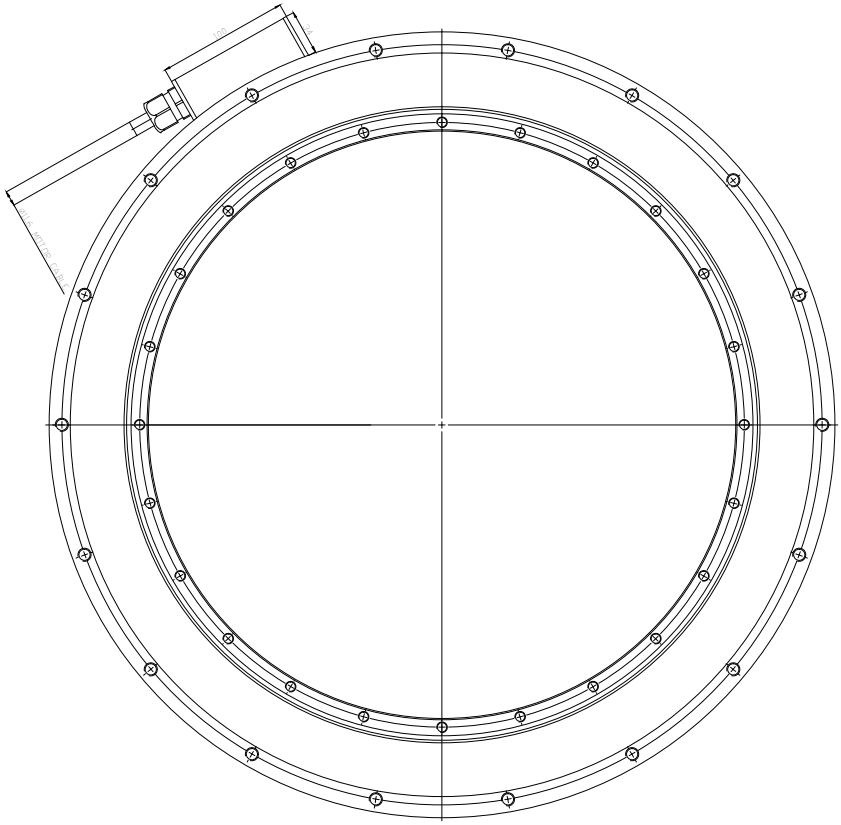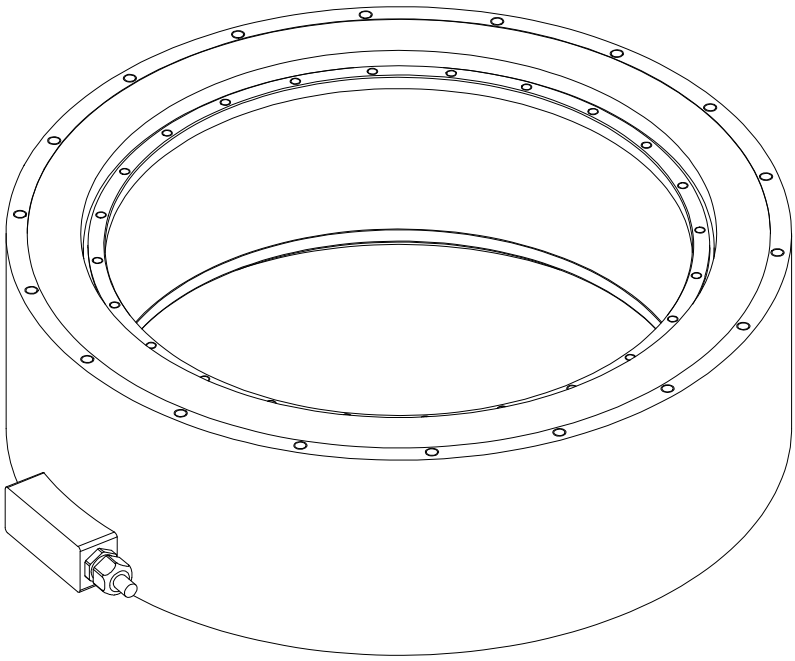
ø576
ø458
ø445 H7
M8-6Hx16(24x)
M8-6Hx16(24x)
M10-6Hx20(18x)
M10-6Hx20(18x)
STATOR
ROTOR
Stator RP36-482-150-C-FT-3000-N0-B Weight 72.08 kg
Rotor RS36-482-150-B Weight 27.27 kg
ø595 f9