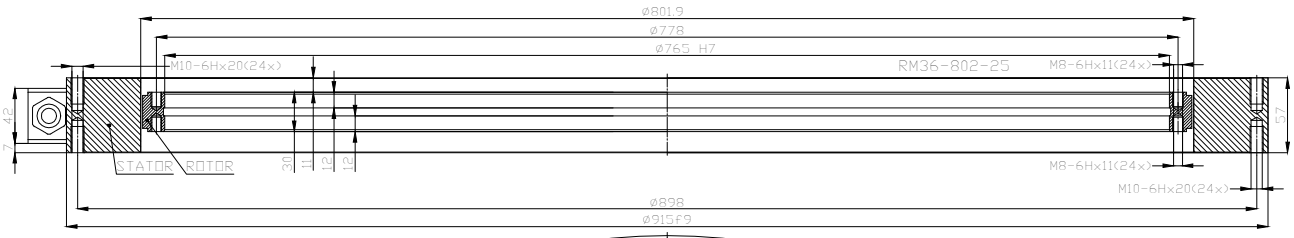
ø801.9
ø778
ø765 H7
M10-6Hx20(24x)
RM36-802-25
M8-6Hx11(24x)
42
7
STATOR
ROTOR
20
11
12
12
M8-6Hx11(24x)
M10-6Hx20(24x)
ø898
ø915f9

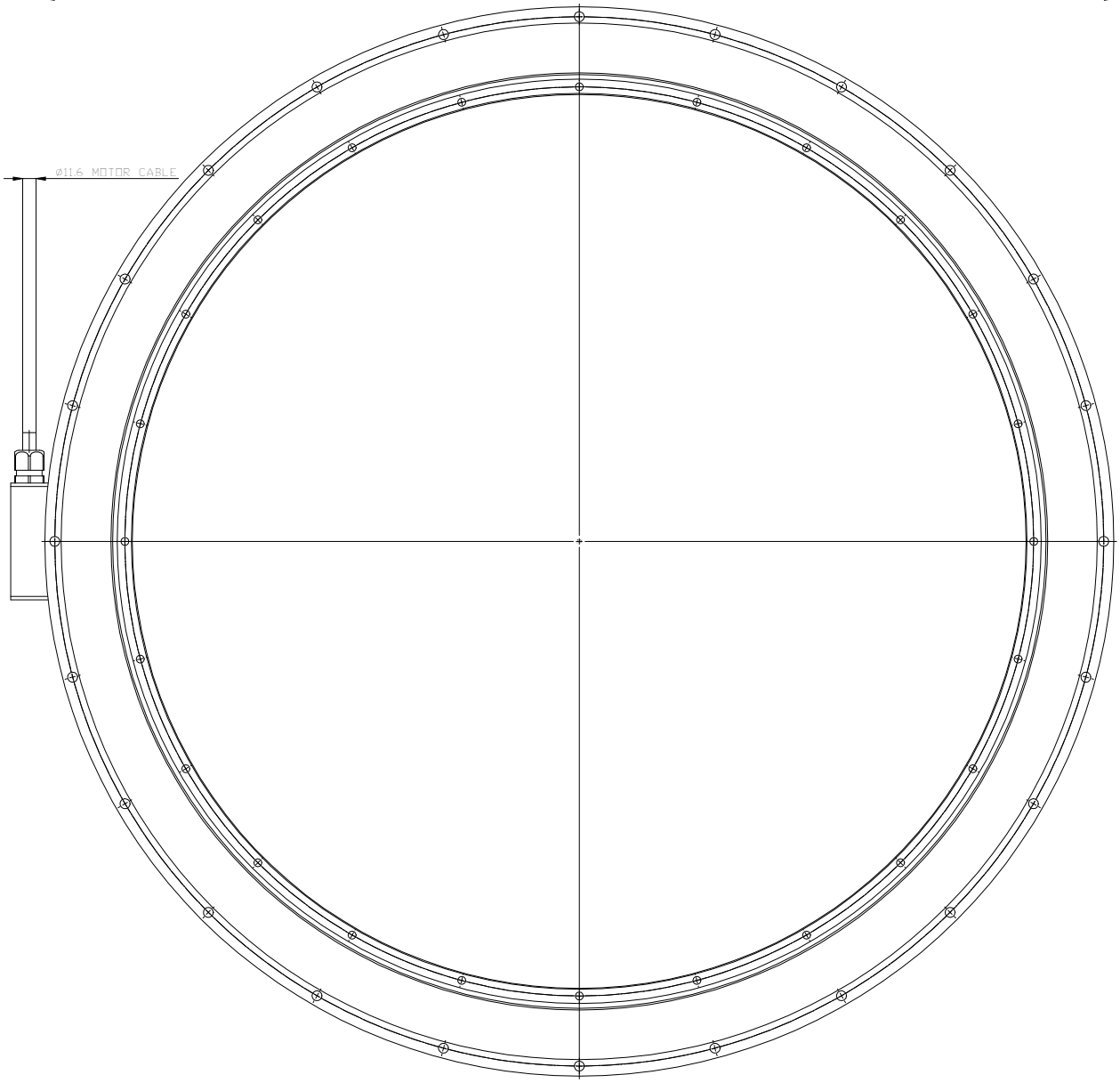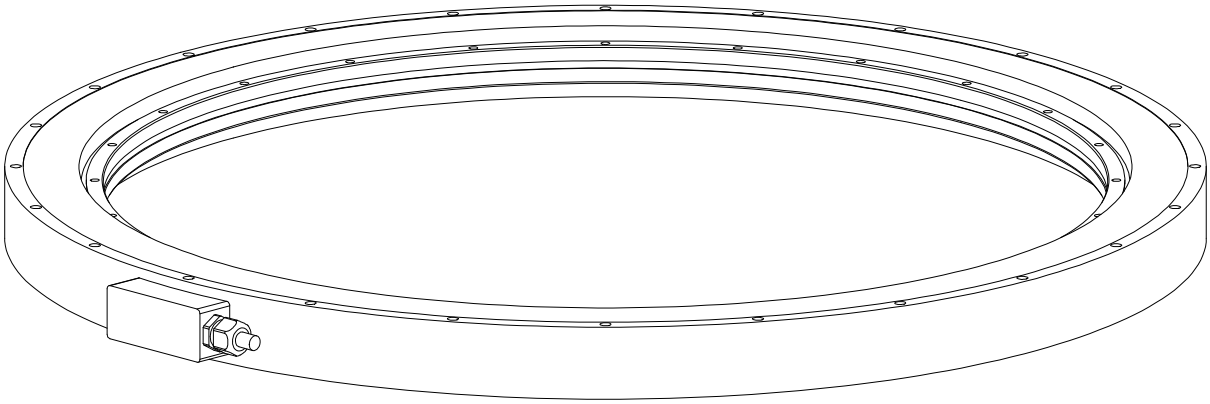
ø11.6 MOTOR CABLE