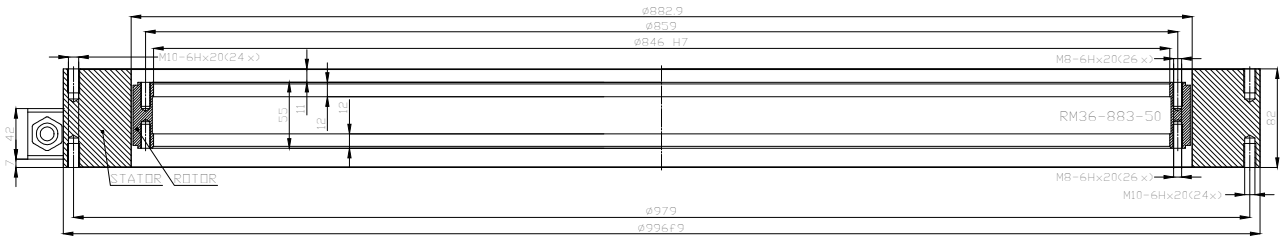
ø882.9
ø859
ø846 H7
M10-6Hx20(24 x)
M8-6Hx20(26 x)
RM36-883-50
STATOR
ROTOR
M8-6Hx20(26 x)
M10-6Hx20(24x)
ø979
ø996f9
42
7
52
11
12
12
62

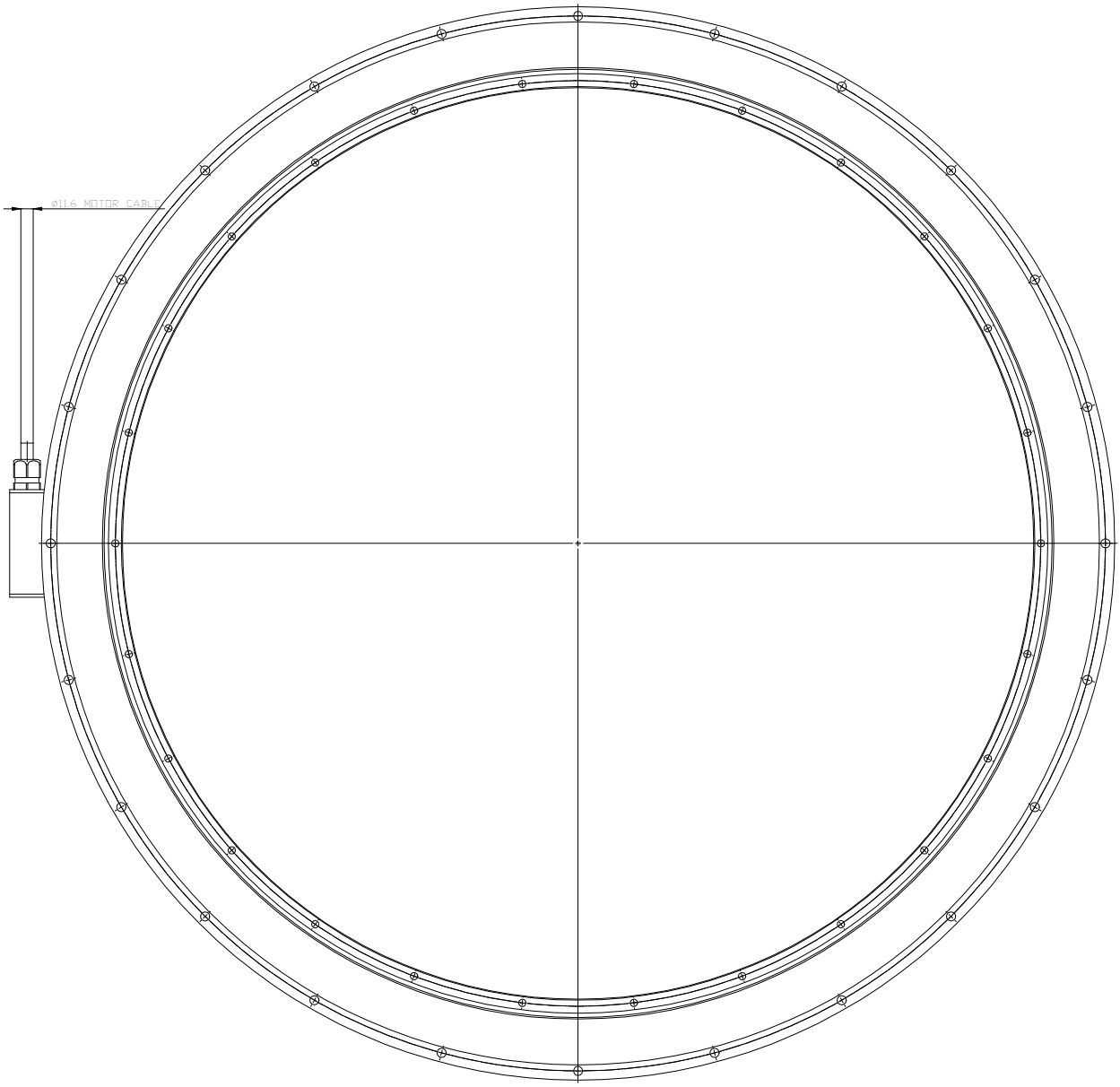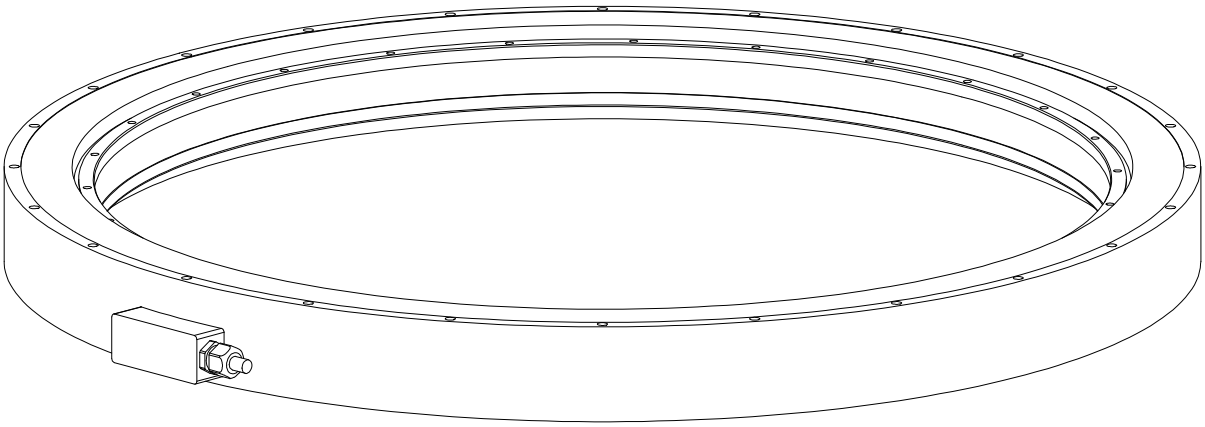
ø11.6 MOTOR CABLE