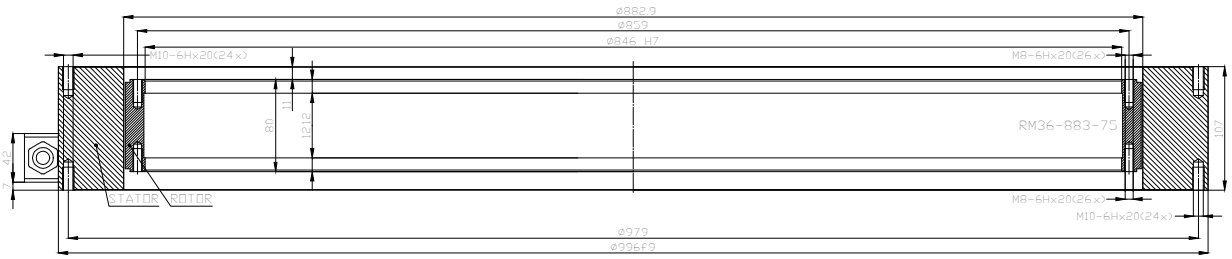
ø882.9
ø859
ø846 H7
M10-6Hx20(24x)
M8-6Hx20(26x)
80
11
12
12
RM36-883-75
102
42
STATOR
ROTOR
M8-6Hx20(26x)
M10-6Hx20(24x)
ø979
ø996f9

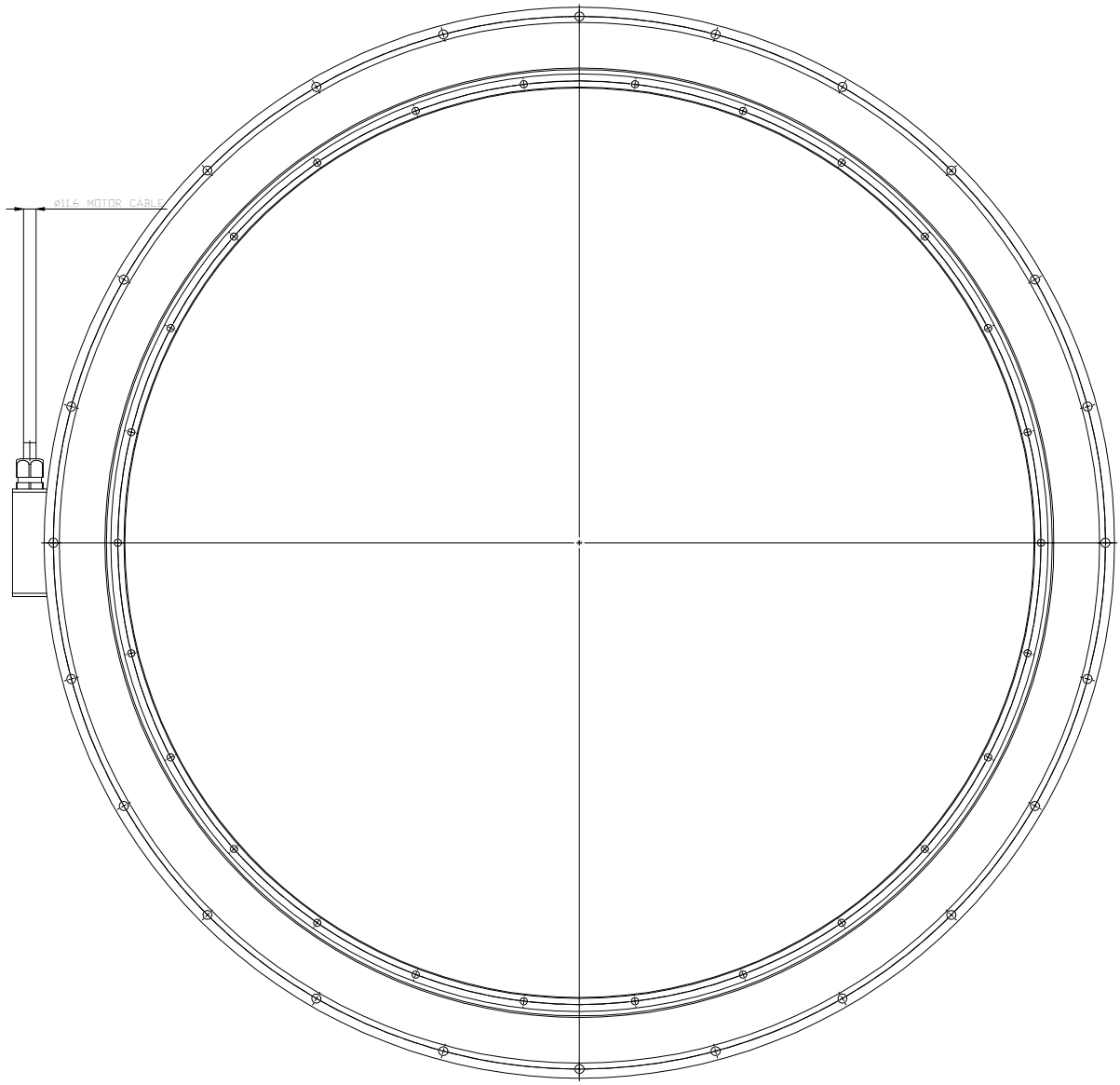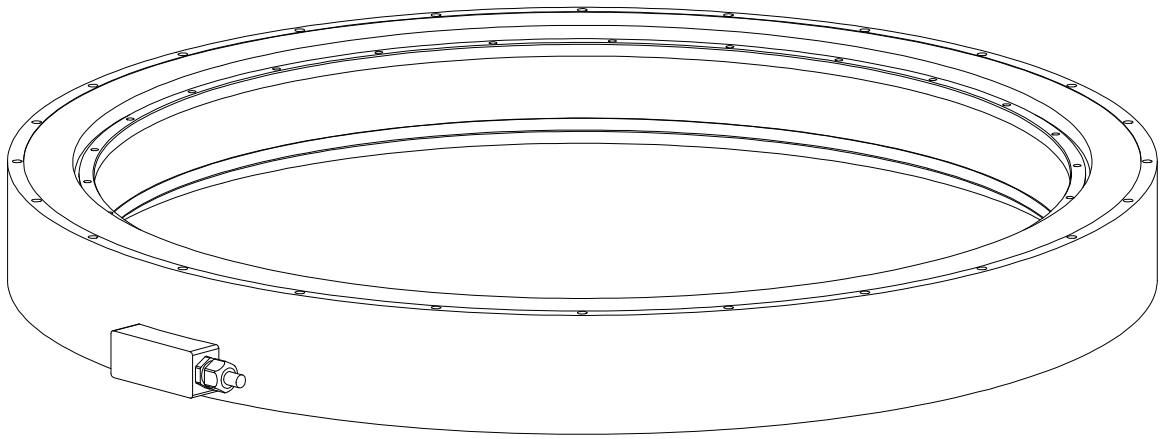
ø11.6 MOTOR CABLE