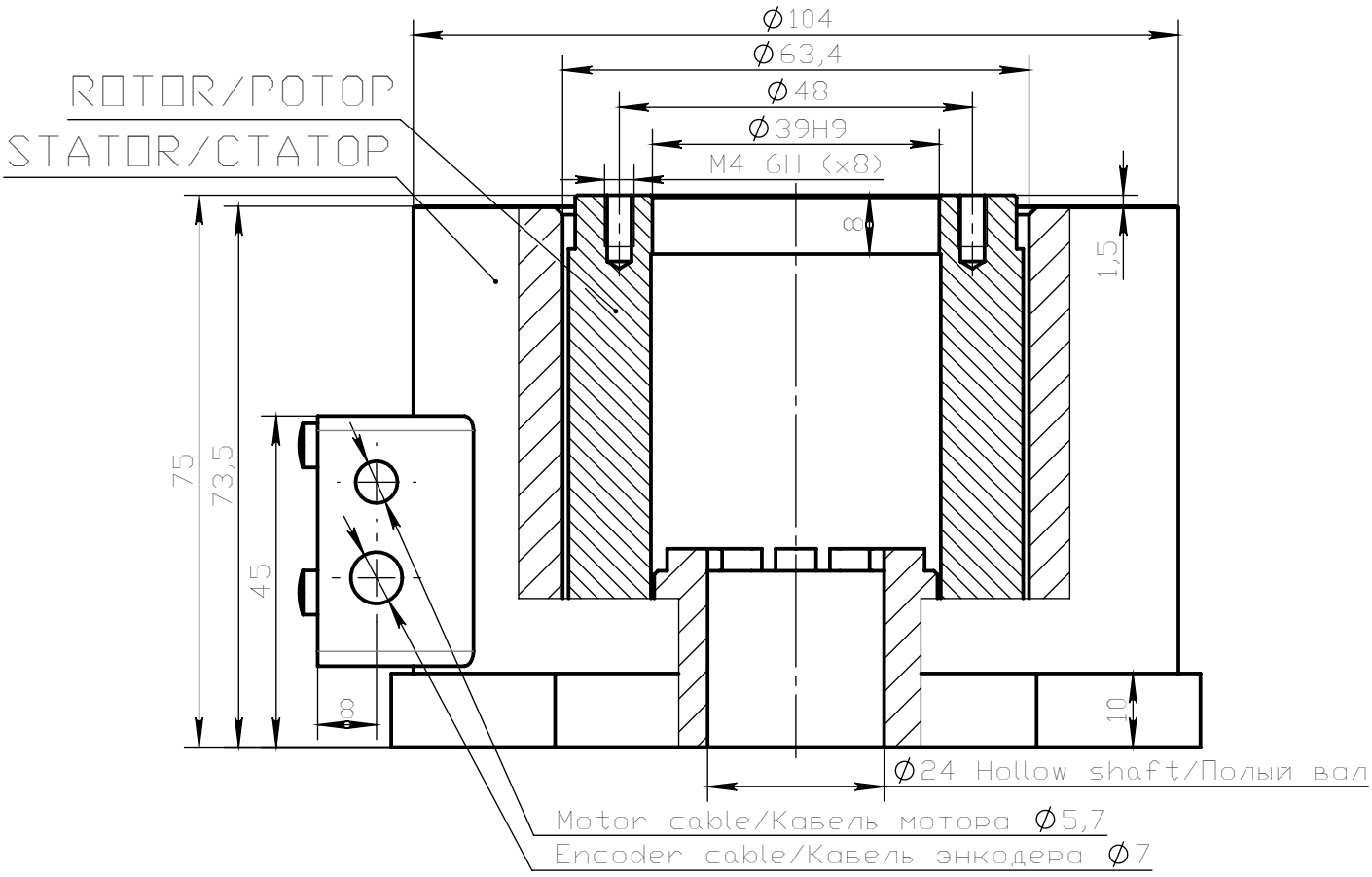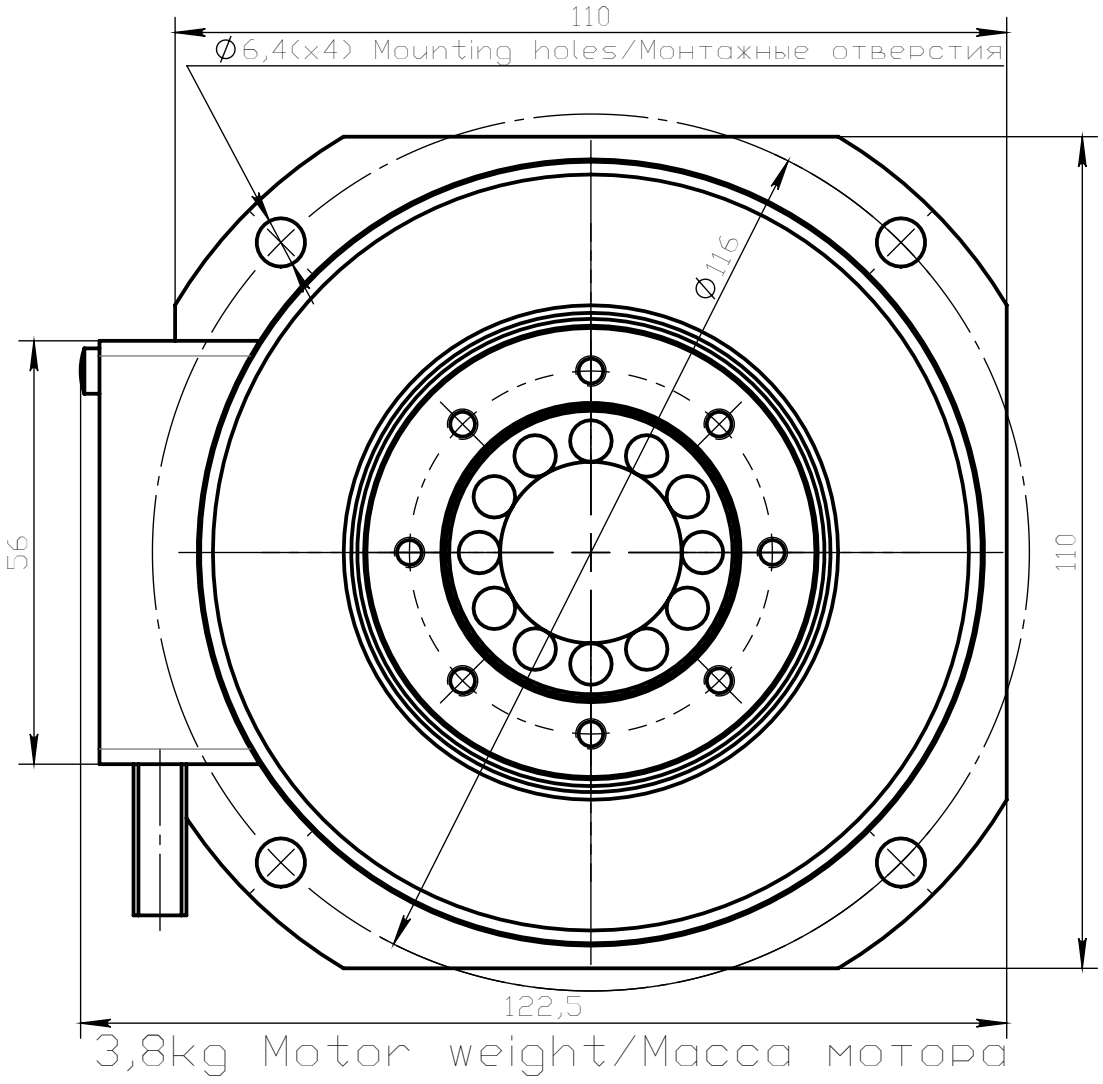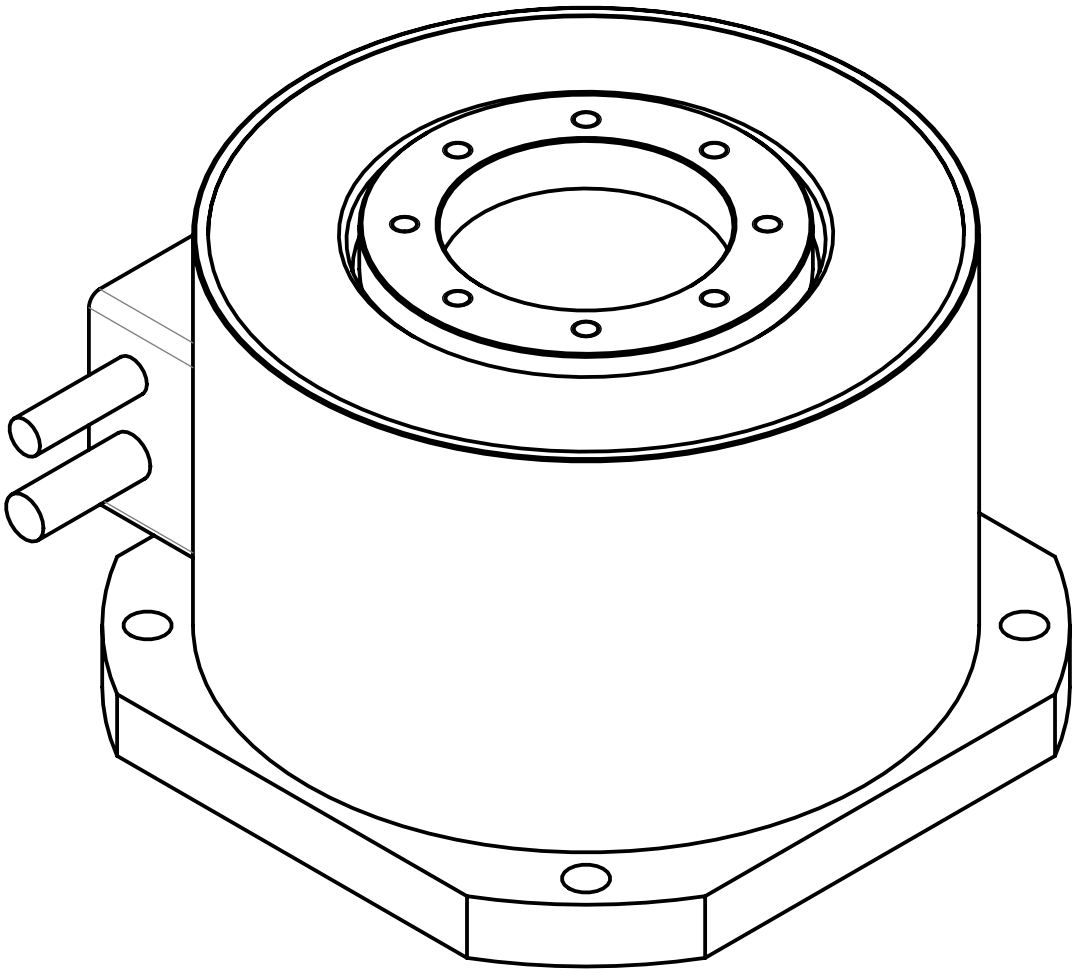RT24-63-50-C-GS1-KF-PR-3000-N0-B