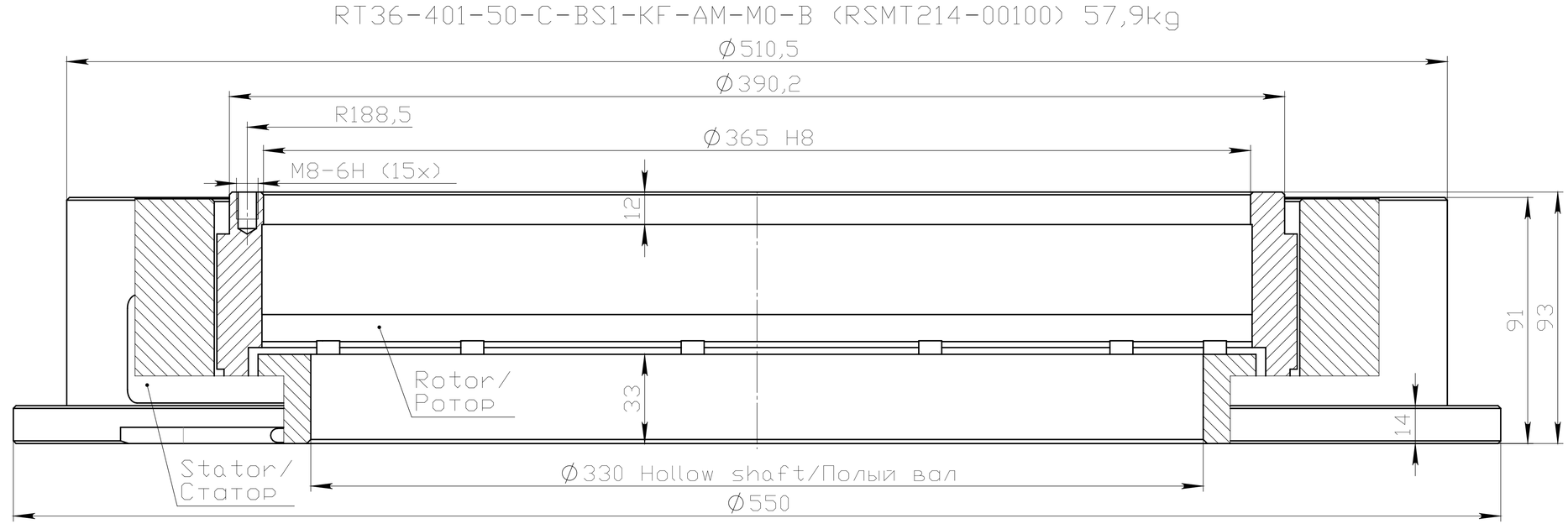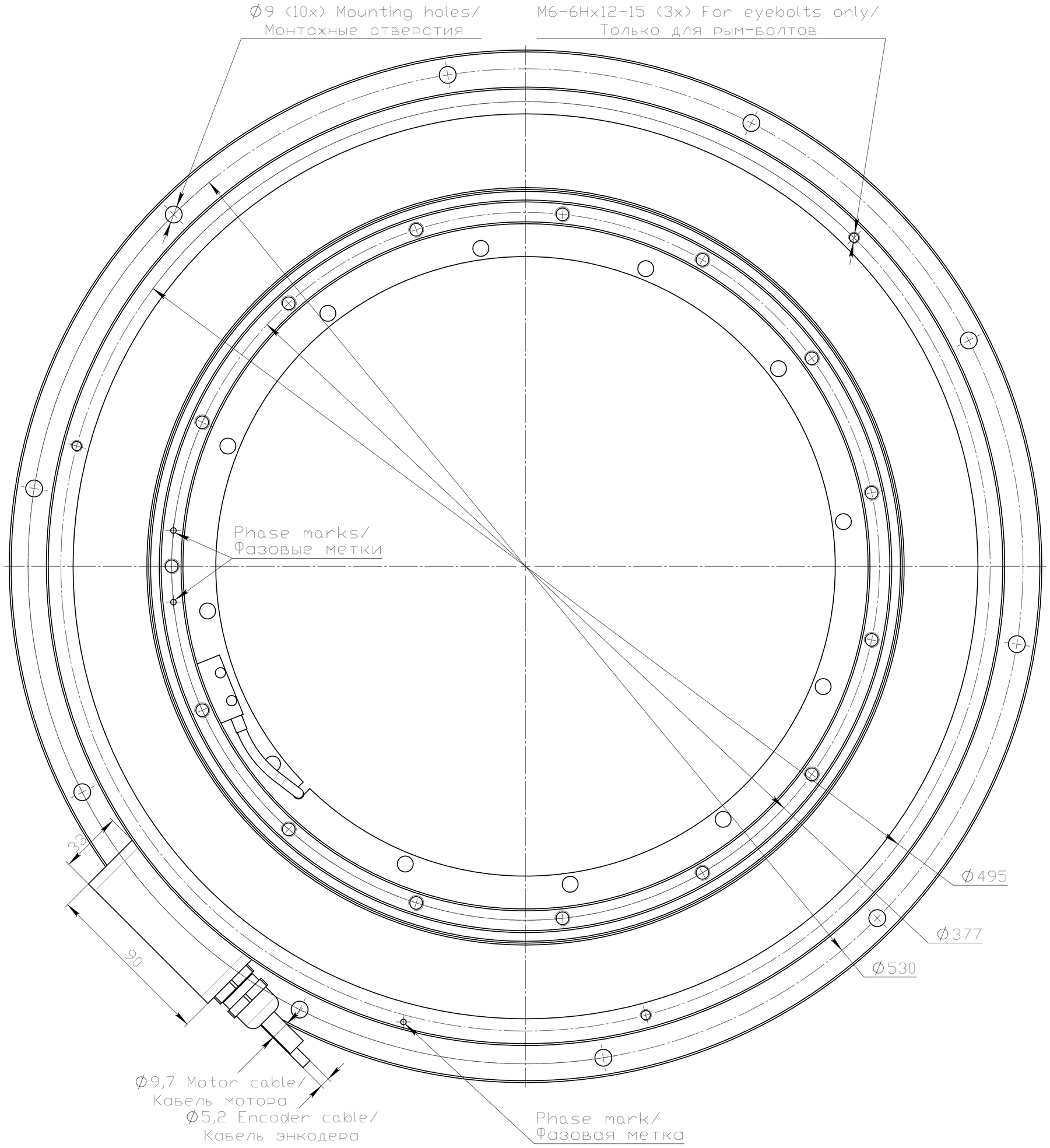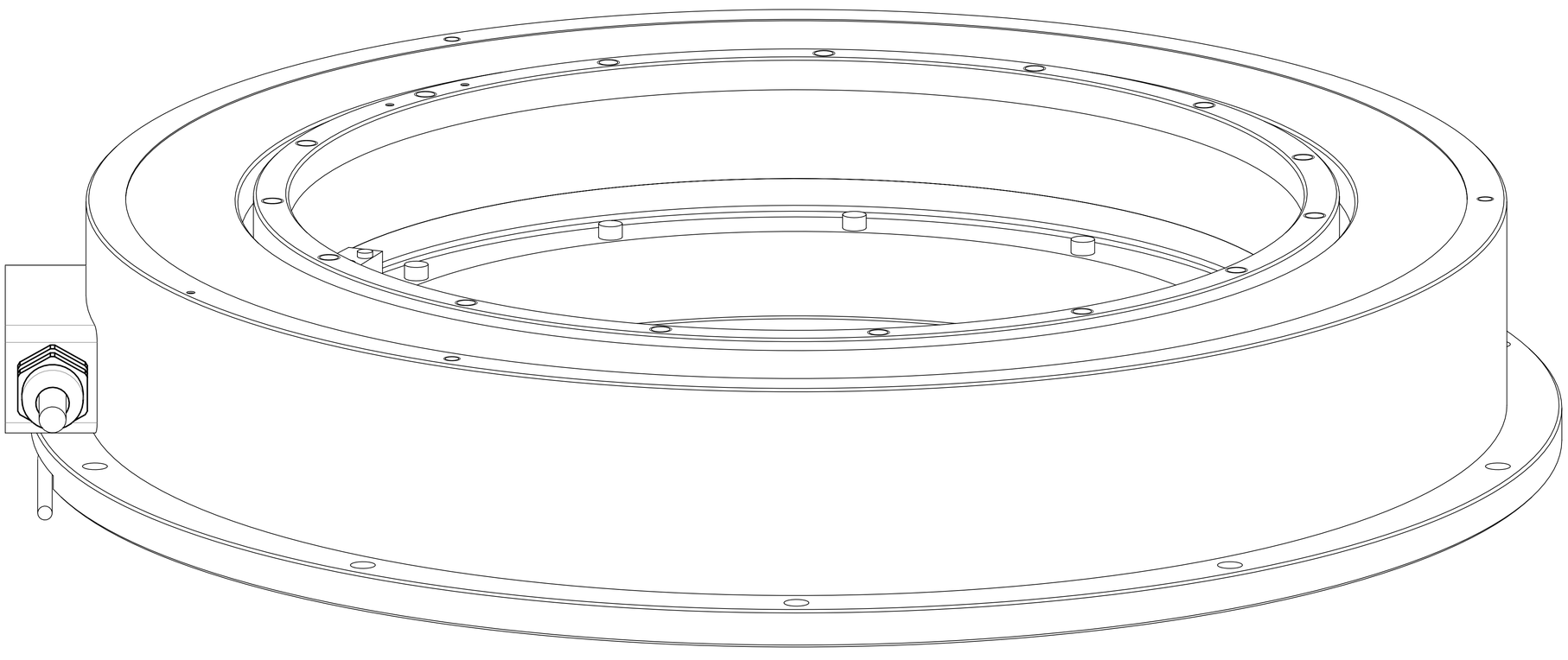RT36-401-50-C-BS1-KF-AM-M0-B (RSMT214-00100) 57,9kg