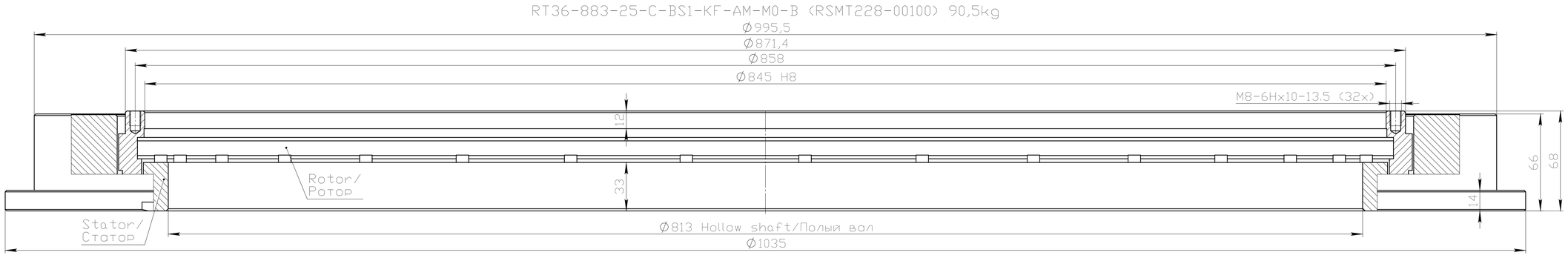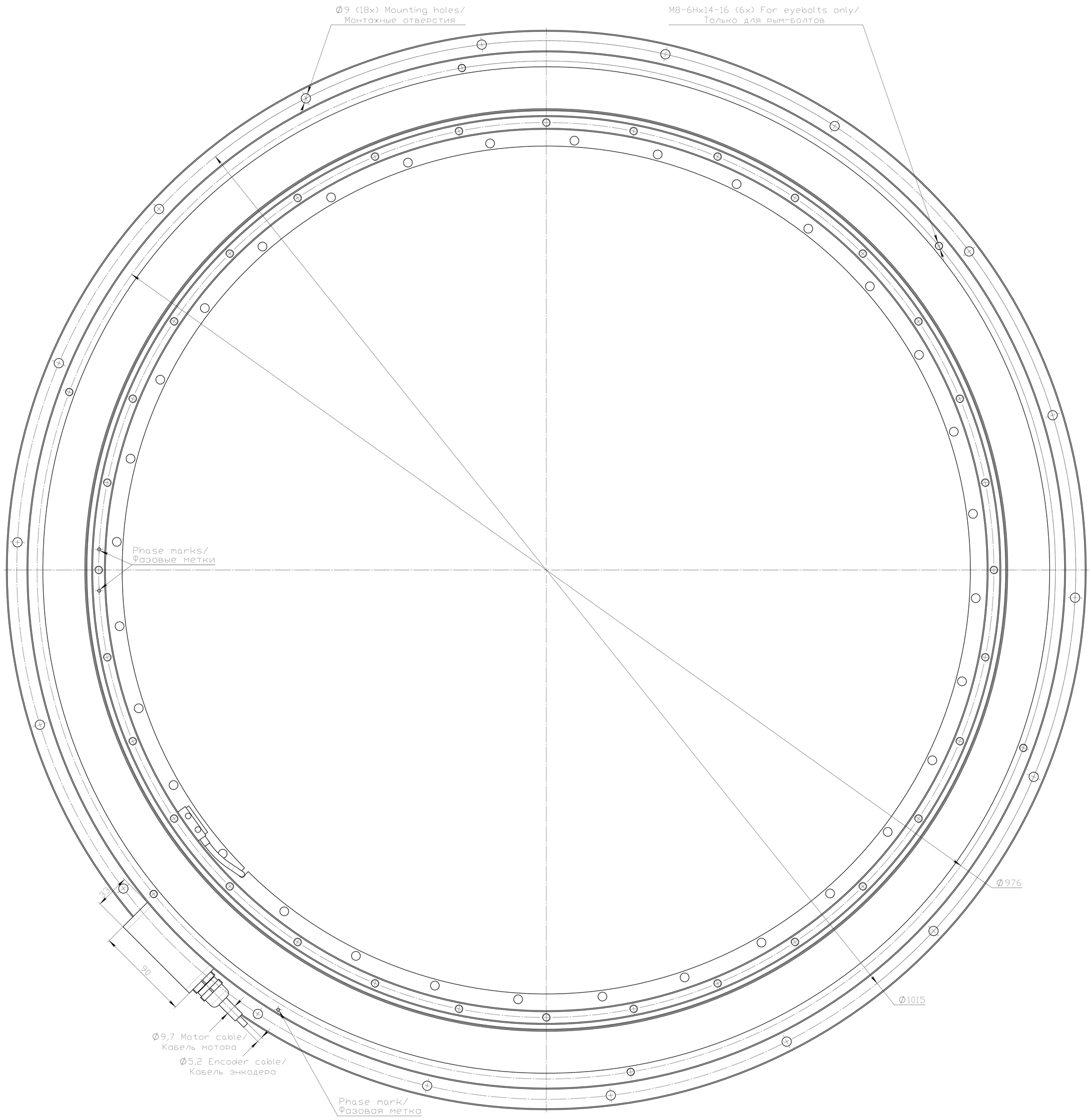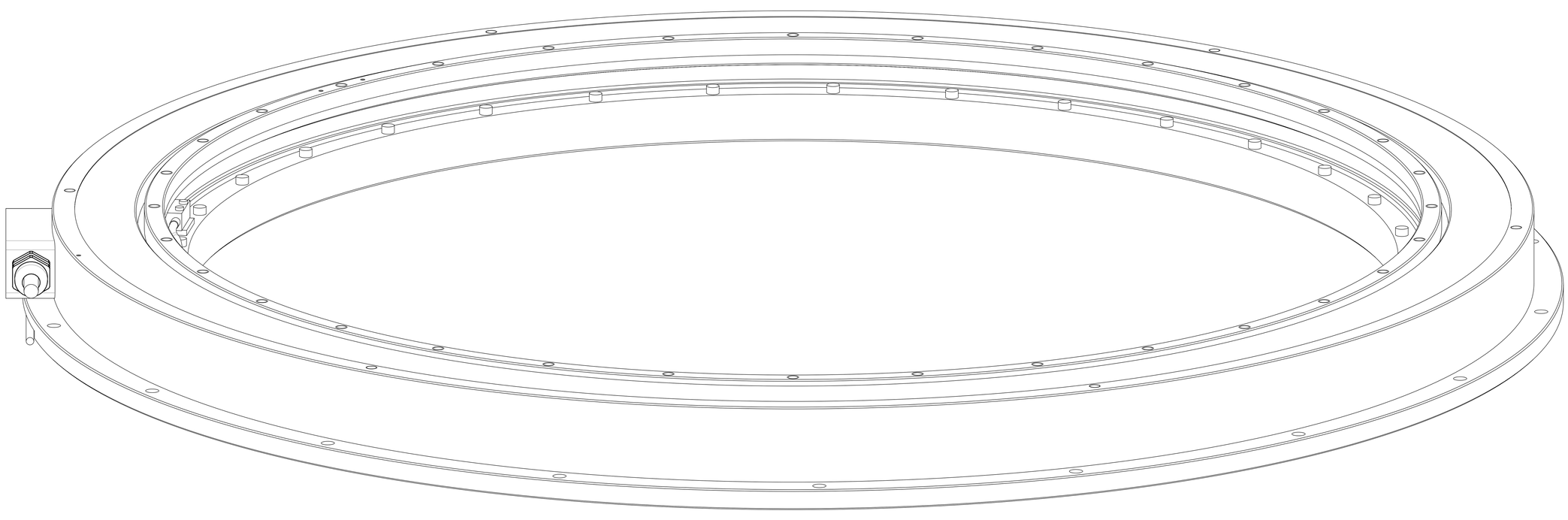RT36-883-25-C-BS1-KF-AM-M0-B (RSMT228-00100) 90,5kg